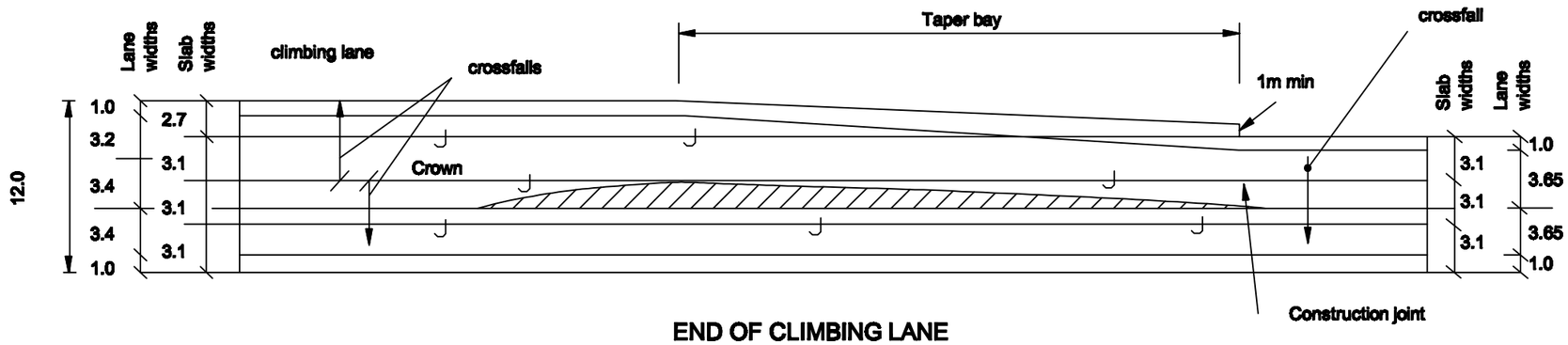

END OF CLIMBING LANE

Reduction to 7.3 width

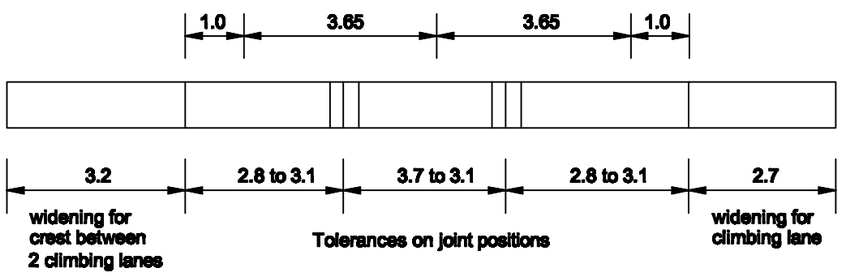

CROSS SECTION - SINGLE CARRIAGEWAY

NOTES

1. ALL DIMENSIONS ARE IN METRES.
2. - - J - - indicates longitudinal joint position.
3. Direction of cross-fall is dependent on curvature.
4. Crowns should be along construction joints.

tm Transport Malta Roads & Infrastructure Directorate	ROAD CONSTRUCTION DETAILS Road Pavements - Concrete and cement bound materials	Rev :	Remarks :	Drawn :	Date :	Title : TYPICAL LONGITUDINAL JOINT POSITIONS, UNREINFORCED SLABS SINGLE CARRIAGEWAY WITH CLIMBING LANE
		A	Issued drawing.		March 2003	
		B	Change Logo to TM	E. Farrugia	March 2014	

Drawing No. : RCD 1000/17