NOTES
1. ALL DIMENSIONS ARE IN MILLIMETRES.
2. Warping joints shall be constructed and sealed in accordance with the Specification. The tie bar spacing shall be varied where necessary so that no tie bar is within 150 of a slab edge or a joint parallel to the bars.

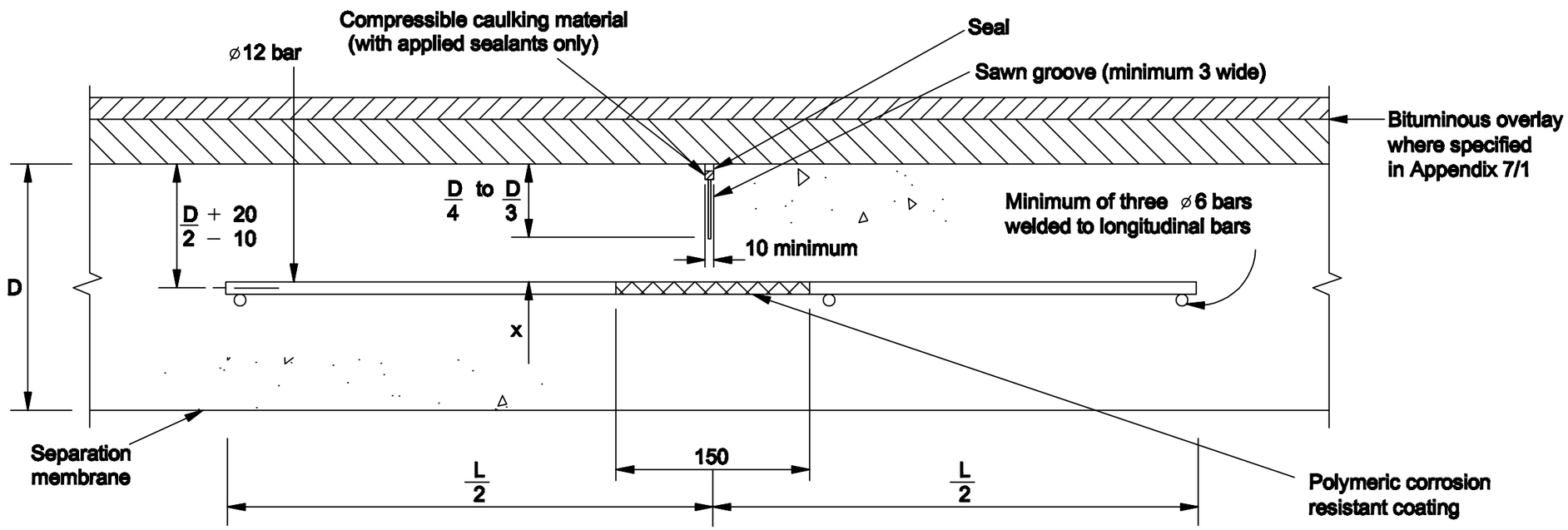

WARPING JOINT - WITH SAWN GROOVE

Tie bar dimensions

Grade of steel	250	460
Tie bar diameter	12	12
Tie bar length L	1000	750

Cover to tie bars

Slab thickness D	> 200	< 200
Cover x	30	20

Transport Malta
Roads & Infrastructure Directorate

ROAD CONSTRUCTION DETAILS

Road Pavements - Concrete and cement bound materials

Rev :	Remarks :	Drawn :	Date :
A	Issued drawing.		March 2003
B	Change Logo to TM	E. Farrugia	March 2014

Title : WARPING JOINTS (UNREINFORCED SLABS ONLY)

Drawing No. : RCD 1000/04